tauron|dts® tauron|dtrs®

DIETZ Individual

Bath & toilet XXL

Assembly	Product name	Product design	Item no.:	Version
Seat/back	tauron|dts tauron|dtrs	Side panel standard Side panel abduction with stand-up aid Side panel swivelling	720000 720001	V 1.1 2022-06

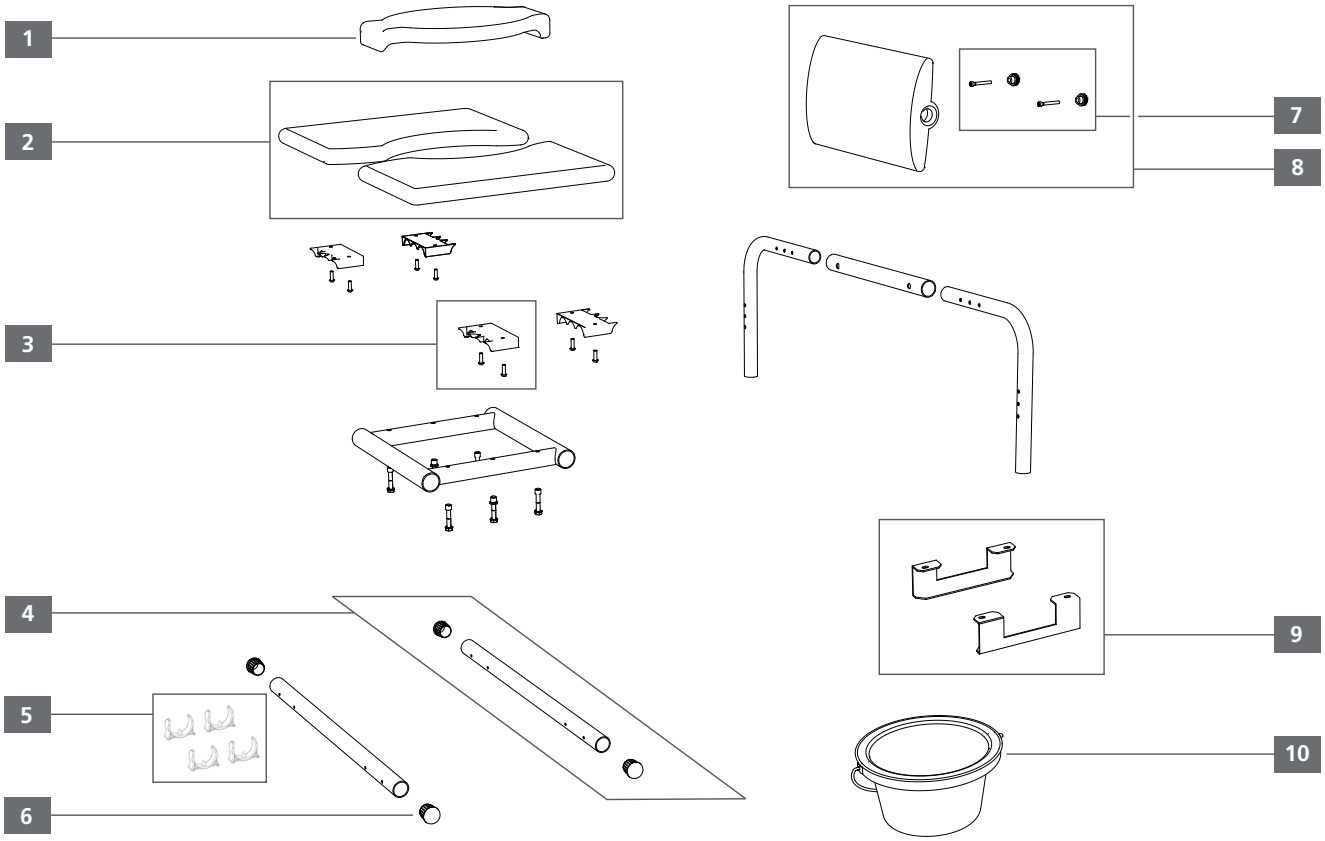

Position	QTY./ assembly	tauron|dts Standard	tauron|dts Abduction	tauron|dts Swiveling	tauron|dtrs Standard	tauron|dtrs Abduction	tauron|dtrs Swiveling	Item no.	Description	QTY. supply
1	1	■	■	■	■	■	■	720327	Hygienic cutout cover (PU), seat	pc.
2	1	■	■	■	■	■	■	720326	Seat cushion (PU) pair	pair
3	4	■	■	■	■	■	■	720328	Positioning bracket (1 pc.) incl. screws	set
4	2	■	■	■	■	■	■	720325	Insert tube incl. cover caps	pc.
5	4	■	■	■	■	■	■	720323	Mounting clip, insert tube, PP, (4 pcs.)	set
6	4	■	■	■	■	■	■	720324	Cover cap (PP), insert tube (2 pcs.)	pair
7	2	■	■	■	■	■	■	720321	Screw set backrest (M6 x 50 2 pcs./knurled nut 2 pcs.)	set
8	1	■	■	■	■	■	■	720322	Back cushion (PU), incl. screw/ knurled nut	pc.
9	2	■	■	■	■	■	■	720329	Holding rail (alu) pair, toilet pan	pair
10	1	■	■	■	■	■	■	720242	Toilet pan round	pc.
o. Abb.	1	■	■	■	■	■	■	720243	Toilet pan rectangula	pc.

DIETZ GmbH
Reutäckerstraße 12
76307 Karlsbad
Telefon +49 7248.9186-0
Telefax +49 7248.9186-86
info@dietz-reha.de
shop.dietz-group.de

tauron|dts® tauron|dtrs®

DIETZ Individual

Bath & toilet XXL

Assembly	Product name	Product design	Item no.:	Version
Side panel	tauron|dts tauron|dtrs	Side panel standard Side panel abduction with stand-up aid Side panel swivelling	720000 720001	V 1.1 2022-06

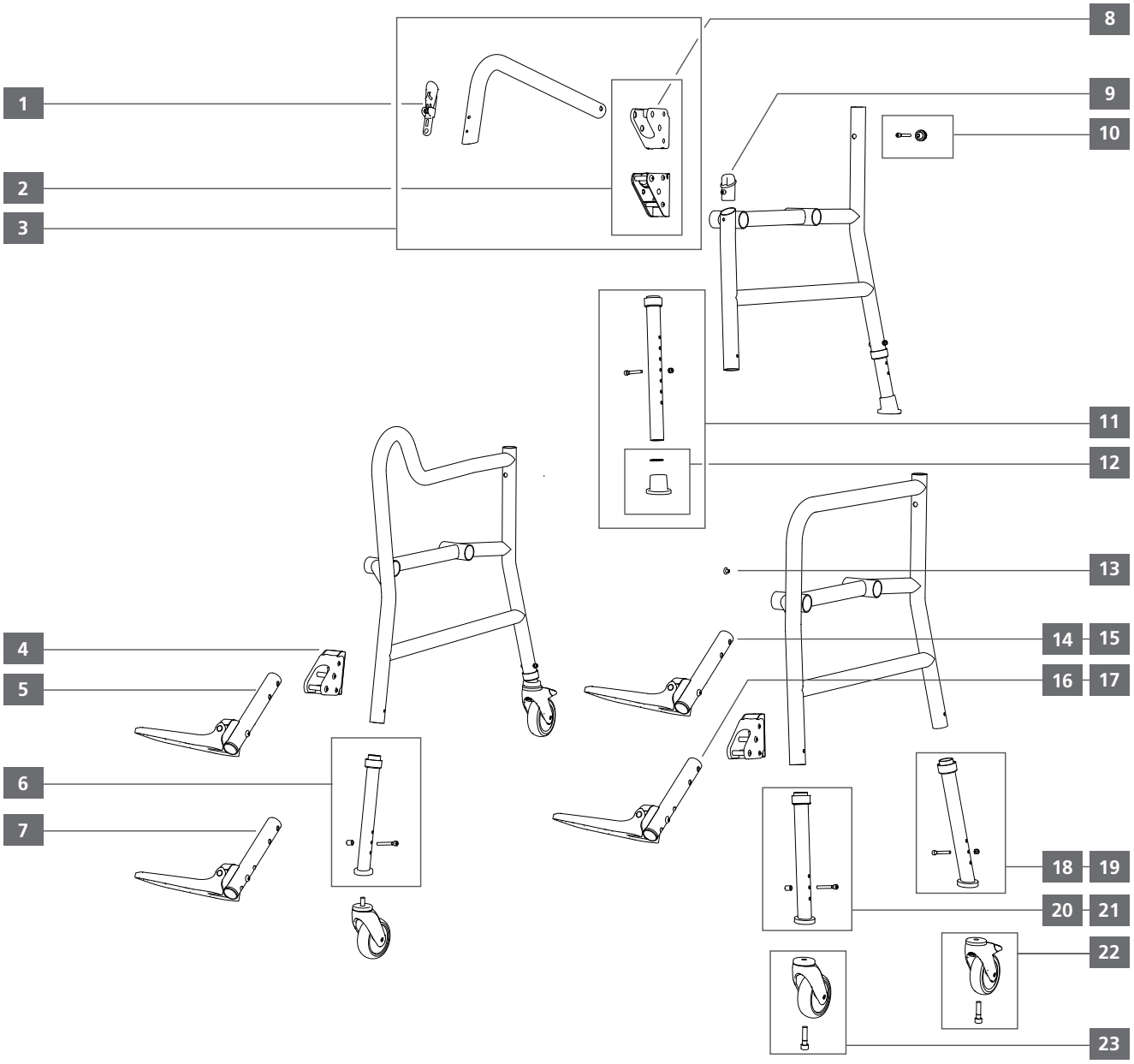

Position	QTY./ assembly	tauron|dts Standard	tauron|dts Abduction	tauron|dts Swiveling	tauron|dtrs Standard	tauron|dtrs Abduction	tauron|dtrs Swiveling	Item no.	Description	QTY. supply
1	2			■			■	720317	Lever inc.l holding, part swivelling, compl.	pc.
2	2			■			■	720319	Cover (plastic), retaining clamp	pc.
3	2			■			■	720318	Armrest incl. bracket, side panel swivelling, lt./ri., compl.	pc.
4	2				■	■	■	720330	Holding clamp compl, leg support	pc.
5	2					■		720309	Leg support incl. Holder, side panel abduction, left/right	pc.

tauron|dts® tauron|dtrs®

DIETZ Individual

Bath & toilet XXL

Assembly	Product name	Product design	Item no.:	Version
Armrest/side panel	tauron|dts tauron|dtrs	Side panel standard Side panel abduction with stand-up aid Side panel swivelling	720000 720001	V 1.1 2022-06

		tauron|dts			tauron|dtrs					
Position	QTY./ assembly	Standard	Abduction	Swiveling	Standard	Abduction	Swiveling	Item no.	Description	QTY. supply
6	2					■		720306	Telescopic leg incl. wheel mount, front le./ri., compl., abduction	pc.
7	2					■		720312	Leg support adjustable, side panel abduction, left/right	pc.
8	2			■			■	720331	Holding clamp compl, side panel swivelling	pc.
9	2			■			■	720316	Mounting pin, side part swivelling, compl.	pc.
10	2	■	■	■	■	■	■	720320	Screw set side panel (M6 x 50 2 pcs./knurled nut 2 pcs.)	set
11	4	■	■	■				720301	Telescopic leg le./ri., compl.	pc.
12	4	■	■	■				720300	Rubber foot (TPE), Washer shape LL (stainless steel)	set
13	2	■	■	■	■	■	■	720313	Hole cover 5,2 mm (2 pcs.)	pair
14	1				■		■	720307	Leg support fixed, side panel Standard/swivelling, left	pc.
15	1				■		■	720308	Leg support fixed, side panel Standard/swivelling, right	pc.
16	1				■		■	720310	Leg support adjustable, side panel Standard/swivelling, right	pc.
17	1				■		■	720311	Leg support adjustable, side panel Standard/swivelling, right	pc.
18	1				■	■	■	720304	Telescopic leg incl. wheel mount, back left, compl.	pc.
19	1				■	■	■	720305	Telescopic leg incl. wheel mount, back right, compl.	pc.
20	1				■		■	720303	Telescopic leg incl. wheel mount, front left, compl., Standard/swivelling	pc.
21	1				■		■	720302	Telescopic leg incl. wheel mount, front right, compl., Standard/swivelling	pc.
22	2/4				■	■	■	720314	Wheel 4"/100 mm, wheelwidth 32 mm, incl. total lock, compl.	pc.
23	2				■	■	■	720315	Wheel 4"/100 mm, wheelwidth 32 mm, compl.	pc.