DIETZ Rehab

Order form
AS[01] adaptive wheelchair

The effective
product system for
individual needs

Shaping mobility.

Pictured with atomic umbra clothes guards/wheel guards and easy-running 24" wheels

Pictured with pearl white clothes guards/wheel guards and easy-running 24" wheels

AS[01]

	AS [01]	
	[bis 125 kg]	**[bis 150 kg]**
Colours	Frame in matt black, wheel guards in pearl white, petrol or atomic umbra / titan grey / cobalt blue / black	
Seat depth (cm)	36 – 45 in increments of 3	48 – 57 in increments of 3
Seat width (cm)	36 – 54 in increments of 2 cm	
Seat height, front (cm)	41,25 – 52,5	
Seat height, back (cm)	41,25 – 52,5	
Back height (cm)	29 – 50 in increments of 3	
Adjustable back rest angle:	adjustable –5° / 0° / 5° / 10° / 15°	
Height of push handles (cm)	86 - 98 depending on the back height (option: +10 cm adjustment range)	
Overall width (cm)	Seat width +20	
Width when folded (cm)	28 with wheels / 30 with wheels and drum brakes	
Overall height (cm)	max. 98 at seat height 50	
Overall length including leg rests (cm)	Seat depth +45 cm	
Overall length excluding leg rests (cm)	Seat depth +33 cm	
Height of armrests (cm)	22 – 26	
Width of armrests (cm)	6	
Length of armrests (cm)	Desk: 25 / Long: 35	
Length of leg rests (cm)	37 – 51 in increments of 1.5	
Drive wheel diameter (inches)	24	
Castor diameter (cm//inches)	12,5 / 15 / 17,5 // 5 / 6 / 7	
Tipping stability (degrees)	10°	
Max. load (kg)	125	150
Weight (kg)	From 12.8	

Product details – basic configuration

- Approved for passenger transport in the vehicle
- Aluminium frame and cross strut
- Upholstered adjustable back rest (Velcro)
- Adjustable camber on drive wheels 0° / 3°
- Choice of leg rest angles: 70° / 80° / 90°
- Three types of wheel guards available (clothes guard, PU armrests, desk/long)
- Extremely stable front wheel fittings
- Ideally suited to add-on motors
- Versatile adjustment options with the need for extra parts (e.g. seat height front/back and angle of back rest)
- clothes guards/wheel guards in 6 colours available
- Crash test certified according to ISO 7176-19; Approved for passenger transport in the vehicle with a headrest suitable for transport

Price for basic configuration (in EUR) from 1,950.00

including wheel guards and separate leg rests

Completing the form on paper

Simply print out the order form, check the relevant component boxes to configure the product, sign the form and send it to us at:

Fax: +49 7248.9186 - 86

Completing the form on a computer or tablet

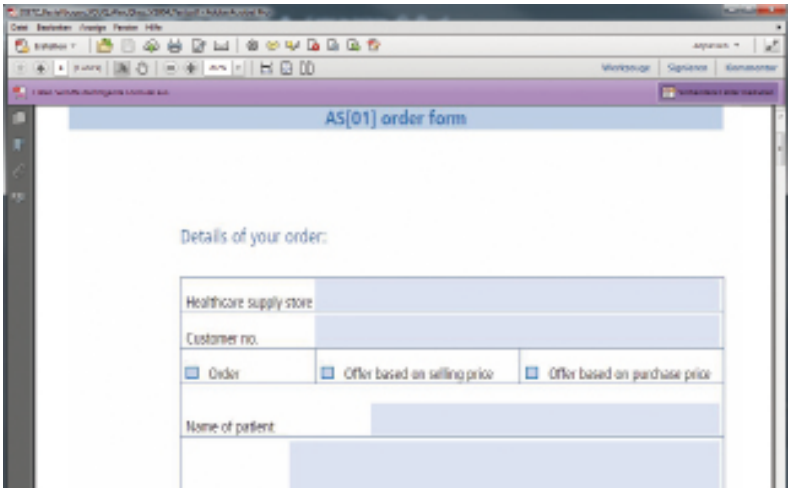

If you open the document in Acrobat, a menu bar highlighted in colour appears at the top edge. If the option "Highlight Existing Fields" is activated, all writeable and selectable fields will be displayed.

○ Circular check boxes indicate that a choice must be made for the given component.

☐ Square check boxes can simply be selected or deselected.

Save the form on your computer under any name you choose and

e mail it to us at:
info@dietz-reha.de

Alternatively, print it out and send it to us at:
Fax: +49 7248.9186 - 86

AS[01] order form

Details of your order:

Healthcare supply store		
Customer no.		
☐ Order	☐ Offer based on selling price	☐ Offer based on purchase price
Name of patient		
Delivery address		
Comments		
Company stamp		
Date, signature		

AS[01] order form

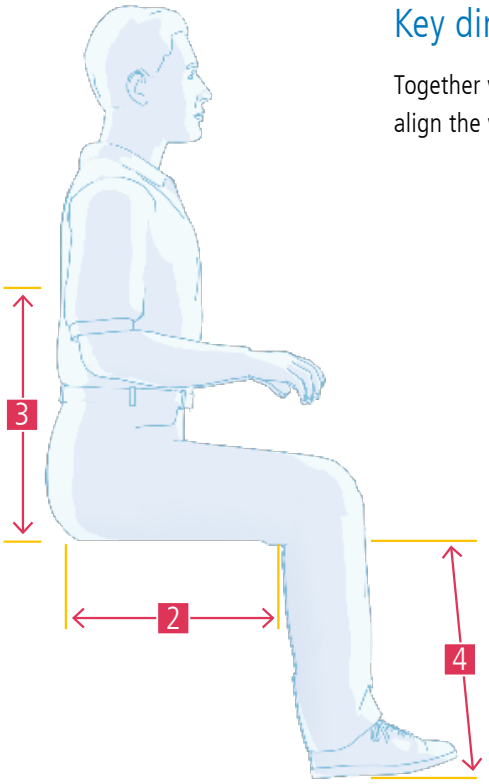

Key dimensions and specifications

Together with the height and weight of the user, these are the key dimensions allowing us to align the wheelchair perfectly to the needs of the user.

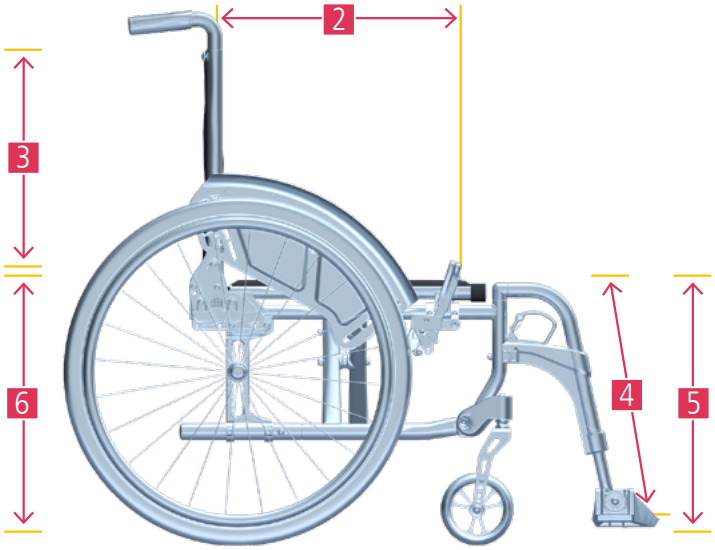

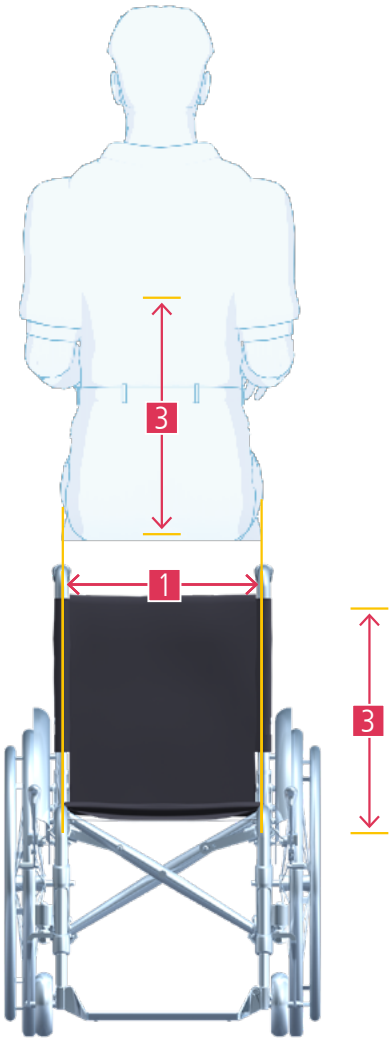

		DATA
	Age of customer	
	Height (cm)	
	Weight (kg)	
1	Seat width (cm)	
2	Seat depth (cm) Length of upper leg less two finger breadths	
3	Height of upholstered back rest (cm) From seat surface to below the shoulder blades	
4	Lower leg length (cm) For the correct height of the foot plate	
5	Seat height, front (cm) Length of lower leg + sufficient clearance between foot plate and ground (at least 4 cm)	
6	Seat height, back (cm) Depends on front seat height, seat angle and seat depth	

AS[01] order form

Description	

SEAT

Seat width to seat depth

Seat depth can be adjusted by 3 cm above the Velcro tape, with no tools

	Seat width (cm)	36	38	40	42	44	46	48	50	52	54	
Seat depth (cm) *	(36) 39	○	○	○	○	○	○	○	○	○		
	Item no.	180113	180115	180118	180121	180124	180130	180134	180138	180142		2.048,00
	(42) 45	○	○	○	○	○	○	○	○	○	○	
	Item no.	180114	180116	180119	180122	180125	180131	180135	180139	180143	180147	2.048,00
	(48) 51		○	○	○	○	○	○	○	○	○	
	Item no.		180117	180120	180123	180126	180132	180136	180140	180144	180148	2.204,00
	(54) 57			○	○	○	○	○	○	○	○	
	Item no.			180150	180151	180127	180133	180137	180141	180145	180149	2.204,00

* Maximum load

125 kg for the seat depths (36) 39 / (42) 45, single cross strut

150 kg for the seat depths (48) 51 / (54) 57 double cross strut

Seat depth can be adjusted by 3 cm above the Velcro tape, with no tools

⊗ clear SELECTION

AS[01] order form

Description

SEAT

Seat height, back (cm) and drive wheel height (inches)

Adjustable in 12.5 mm increments with no extra mounting materials

Seat height, back	38,75	40	41,25	42,5	43,75	45	46,25	47,5	48,75	50
22" drive wheel	○	○	○	○	○	○	○	○	○	○

Seat height, back	41,25	42,5	43,75	45	46,25	47,5	48,75	50	51,25	52,5
24" drive wheel	◉	○	○	○	○	○	○	○	○	○
Item no.	181031	181032	181033	181034	181035	181036	181037	181038	181039	181040

Seat height, back	43,75	45	46,25	47,5	48,75	50	51,25	52,5	
26" drive wheel	○	○	○	○	○	○	○	○	

The combination with 22 "and 26" drive wheels must be individually checked depending on the selected seat height and seat depth. Our individual team will be happy to advise you.

Seat height, front, and castor diameter (cm)

Adjustable in 1.25 cm increments with no extra mounting materials

Seat height, front	41,25	42,5	43,75	45	46,25	47,5	48,75	50	
Castor 12,5 cm / 5"	○	○	○	○	○	○	○	○	
Item no.	181011	181012	181013	181014	181015	181016	181017	181018	

Seat height, front	42,5	43,75	45	46,25	47,5	48,75	50	51,25	
Castor 15 cm / 6"	○	○	○	○	○	○	○	○	
Item no.	181081	181082	181083	181084	181085	181086	181087	181088	

Seat height, front	45	46,25	47,5	48,75	50	51,25	52,5	
Castor 17,5 cm / 7"	○	○	○	○	○	○	○	
Item no.	181021	181022	181023	181024	181025	181026	181027	

⊗ **clear SELECTION**

Warning

We strongly recommend that the seat should not be lower at the front than at the back. Otherwise, the danger exists that the wheelchair user may slide or fall forward and out of the chair.

AS[01] order form

Description

ADI BACK SYSTEM

Back height to back width
Aluminum back shell with quick release

The adjustment ranges of the quick release holder:
Seat depth: 3 cm
Back width: 2 cm (per side)
Back angle: +10° / –10°

ADI back width (cm)	ADI back height (cm)	Contour 6,25 cm				
		25	33	41	46	51
	36 compatible with wheelchair SW 36 cm	○	○	○		
	Art.-Nr.	184423	184430	184439		
	38 compatible with wheelchair SW 36 cm	○	○	○		
	Item no.	184424	184431	184440		
	41 compatible with wheelchair SW 38-40 cm	○	○	○	○	○
	Item no.	184425	184432	184441	184448	184455
	43 compatible with wheelchair SW 40-42 cm	○	○	○	○	○
	Item no.	184426	184434	184443	184450	184457
	46 compatible with wheelchair SW 44 cm	○	○	○	○	○
	Item no.	184427	184435	184444	184451	184458
	EURO*	643,00 €	683,00 €			694,00 €
	48 compatible with wheelchair SW 46 cm	○	○	○	○	○
	Item no.	184428	184436	184445	184452	184459
	51 compatible with wheelchair SW 48 - 50 cm	○	○	○	○	○
	Item no.	184429	184437	184446	184453	184460
	EURO*	668,00 €	708,00 €			714,00 €

6.25 cm contour can be selected according or up to max. 3cm wider as the seat width of the wheelchair.

⊗ **clear SELECTION**

*** Net retail prices exclusive of VAT**

AS[01] order form

Description

ADI BACK SYSTEM

Back height to back width
Aluminum back shell with quick release

The adjustment ranges of the quick release holder:
Seat depth: 3 cm
Back width: 2 cm (per side)
Back angle: +10° / –10°

		Contour 10 cm				
	ADI back height (cm)	**25**	**33**	**41**	**46**	**51**
ADI back width (cm)	**38** compatible with wheelchair SW 36 cm	○	○	○		
	Item no.	184493	184463	184472		
	41 compatible with wheelchair SW 38-40 cm	○	○	○	○	○
	Item no.	184494	184464	184473	184480	184487
	43 compatible with wheelchair SW 40-42 cm	○	○	○	○	○
	Item no.	184495	184466	184475	184482	184489
	46 compatible with wheelchair SW 44 cm	○	○	○	○	○
	Item no.	184496	184467	184476	184483	184490
	EURO*	785,00 €				815,00 €
	48 compatible with wheelchair SW 46 cm	○	○	○	○	○
	Item no.	184497	184468	184477	184484	184491
	51 compatible with wheelchair SW 48 - 50 cm	○	○	○	○	○
	Item no.	184498	184469	184478	184485	184492
	EURO*	810,00 €				835,00 €

10 cm contour can be selected 1 to max. 3 cm wider than the seat width of the wheelchair.

⊗ **clear SELECTION**

*** Net retail prices exclusive of VAT**

AS[01] order form

ACCESSORIES ADI BACK SYSTEM

Push handles

Selection	Item no.		Description	EURO *
○	182270	Push handles fixed	No drum brake	0,00
○	182271	Push handles, height adjustable 10 cm	available from push handle height 45-55 cm	205,00

⊗ Selection recommended by DIETZ

Dietz selects the appropriate height of the push handles for the ADI back as specified below. Any other combination is possible, please select accordingly.

	ADI back height (cm)	25	33	41	46	51
Push handle height (cm)	fixed 35 cm	⊗		○	○	○
	fixed 41 cm / height adjustable 45-55 cm	⊗		⊗	○	○
	fixed 47 cm / height adjustable 51-61 cm	○	○	○	⊗	○
	fixed 53 cm / height adjustable 57-67 cm	○	○	○	○	⊗

The ADI back system cannot be combined with the push handles for the foldable back

Headrests

☐	185152	Ultra headrest, occipital and neck pad separated, 3-settings adjustable (angle, height, depth)	740,00

○	185143	Lateral pads, brackets 23 cm, left + right, swing away, pad 2 pcs. (width x height) 11,4 x 5,1 cm	535,00
○	185144	Lateral pads, brackets 23 cm, left, swing away, pad 1 pcs. (width x height) 11,4 x 5,1 cm	370,00
○	185145	Lateral pads, brackets 23 cm, right, swing away, pad 1 pcs. (width x height) 11,4 x 5,1 cm	370,00

Additional headrests can be found on a seperate order form on our website.

⊗ **clear SELECTION**

*** Net retail prices exclusive of VAT**

AS[01]RF order form

Description	EUROS *

SEAT CUSHION FOR POSITIONING AND DECUBITUS PREVENTION

Seat width to seat depth

Vicair Active O2 cushion height 6 cm

Seat depth (cm)	Seat width (cm)	36	38	40	42	44	46	48	50	52	54	
	36	○	○	○	○							
	Item no.	184540	184544	184549	184553							569,00
	39	○	○	○	○		○	○	○	○		
	Item no.	184541	184545	184550	184554		on request					569,00
	42	○	○	○	○		○	○	○	○		
	Item no.	184542	184546	184552	184551		184558	184562	on request			569,00
	45	○	○	○	○		○	○	○	○		
	Item no.	184543	184547	184548	184555		184559	184563	on request			569,00
	48		○	○	○		○	○	○	○		
	Item no.		on request		184556		184560	184564	184566	184568		569,00
	51			○	○		○	○	○	○		
	Item no.			on request	184557		184561	184565	184567	184569		569,00
	54			○	○		○	○	○	○		
	Item no.			on request								569,00

Vicair Active O2 cushion height 9 cm

Seat depth (cm)	Seat width (cm)	36	38	40	42	44	46	48	50	52	54	
	36	○	○	○	○							
	Item no.	184580	184584	184588	184592							569,00
	39	○	○	○	○		○	○	○	○		
	Item no.	184581	184585	184589	184593		on request					569,00
	42	○	○	○	○		○	○	○	○		
	Item no.	184582	184586	184590	184594		184598	184701	on request			569,00
	45	○	○	○	○		○	○	○	○		
	Item no.	184583	184587	184591	184595		184599	184702	on request			569,00
	48		○	○	○		○	○	○	○		
	Item no.		on request		184596		184600	184703	184705	184707		569,00
	51			○	○		○	○	○	○		
	Item no.			on request	184597		184700	184704	184706	184708		569,00
	54			○	○		○	○	○	○		
	Item no.			on request								569,00

⊗ **clear SELECTION**

Deviations from the wheelchair dimensions of +/- 1 cm are negligible.

*** Net retail prices exclusive of VAT**

AS[01] order form

Selection	Item no.	Description		EUROS *
		WHEELS		
		Drive wheels		
		All drive wheels have a 12 mm quick-release axle		
○	182012	24" wheel rim, aluminium hand rim and hub, tangential spokes, black hub and wheel rim, silver hand rim	puncture-resistant PU, black tyres 24 x 1"	0,00
○	182013	24" wheel rim, aluminium hand rim and hub, tangential spokes, black hub and wheel rim, silver hand rim	Air-filled tyres Marathon plus 24 x 1"	60,00
○	182015	Easy-running 24" wheels, hollow wheel rim, aluminium hand rim, radial spokes, black hub and wheel rim, atomic umbra hand rim approved for user weights up to 100 kg	Air-filled tyres Marathon plus 24 x 1"	219,00
○	182016	Easy-running 24" wheels, hollow wheel rim, black anodized aluminium hand rim, radial spokes, black hub and wheel rim, black hand rim approved for user weights up to 100 kg	Air-filled tyres Marathon plus 24 x 1"	219,00
○	182018	24" wheel rim, aluminium hand rim and hub, tangential spokes, including drum brake for assistant, black hub and wheel rim, silver hand rim	Puncture-resistant PU, grey tyres 24 × 1 3/8"	130,00
○	182021	24" wheel rim, aluminium hand rim and hub, tangential spokes, including drum brake for assistant, black hub and wheel rim, silver hand rim	Air-filled tyres Marathon plus 24 x 1"	190,00
		Further drive wheels on request		
○		22" wheel rim, aluminium hand rim and hub, tangential spokes, hub, wheel rim and hand rim black	Air-filled tyres Marathon plus, 22 x 1"	on request
○		22" wheel rim, aluminium hand rim and hub, tangential spokes, hub, wheel rim and hand rim black	Puncture-resistant PU, black tyres 22 x 1"	on request
○		22" wheel rim, aluminium hand rim and hub, tangential spokes, including drum brake for assistant, hub, wheel rim and hand rim black	Air-filled tyres Marathon plus, 22 x 1"	on request
○		22" wheel rim, aluminium hand rim and hub, tangential spokes, including drum brake for assistant, hub, wheel rim and hand rim black	Puncture-resistant PU, black tyres 22 x 1"	on request
○		26" wheel rim, aluminium hand rim and hub, tangential spokes, hub, wheel rim and hand rim black	Air-filled tyres Marathon plus, 26 x 1"	on request
○		26" wheel rim, aluminium hand rim and hub, tangential spokes, hub, wheel rim and hand rim black	Puncture-resistant PU, grey tyres 26 x 1"	on request
○		26" wheel rim, aluminium hand rim and hub, tangential spokes, including drum brake for assistant, hub, wheel rim and hand rim black	Air-filled tyres Marathon plus, 26 x 1"	on request
○		26" wheel rim, aluminium hand rim and hub, tangential spokes, including drum brake for assistant, hub, wheel rim and hand rim black	Puncture-resistant PU, grey tyres 26 x 1"	on request

The combination with 22 "and 26" drive wheels must be individually tested depending on the selected seat height and seat depth. Our individual team will be happy to advise you.

⊗ **clear SELECTION**

*** Net retail prices exclusive of VAT**

AS[01]RF order form

WHEELS

Position

Drive wheel position: +2 cm (to the back) to –8 cm (to the front) of the midpoint of the back rest tube

Selection	Item no.		Description	EUROS *
○	181061	+ 2 cm	Extended wheelbase for add-on motors and leg rests for amputees / cannot be combined with 22" drive wheels	0,00
○	181063	- 2 cm		0,00
○	181064	- 4 cm	Cannot be combined with seat depth (36) 39 cm Anti-tipping wheels (Art.-Nr. 182201 / 182202) recommended	0,00
○	181065	- 6 cm	Cannot be combined with seat depth (36) 39 cm Anti-tipping wheels (Art.-Nr. 182201 / 182202) recommended	0,00
○	181066	- 8 cm	Cannot be combined with seat depth (36) 39 cm Anti-tipping wheels (Art.-Nr. 182201 / 182202) necessary	0,00

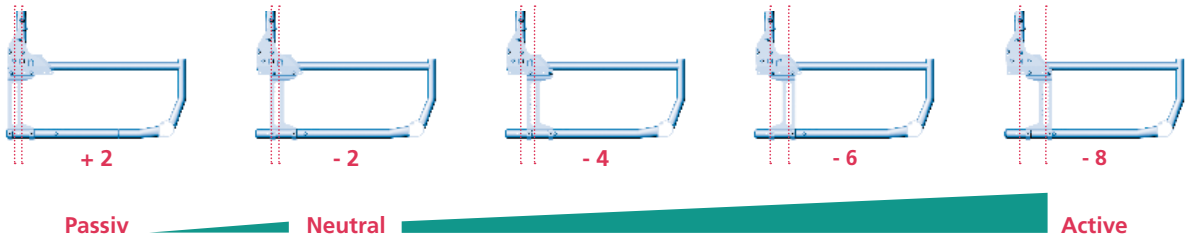

Camber

Adjustable via drive wheel adapter with no extra mounting materials

○	181071	0°		0,00
○	181072	3°	Cannot be combined with drum brake	0,00

CASTORS

○	182004	Easy-running Alucore wheels, 125 mm / 5" silver anodized	129,00
○	182005	Easy-running Alucore wheels, 125 mm / 5" black powder coated	129,00
○	182001	PU tyre 125 mm / 5", puncture-resistan, plastic wheel rims	0,00
○	182002	PU tyre 150 mm / 6", puncture-resistan, plastic wheel rims	0,00
○	182003	PU tyre 175 mm / 7", puncture-resistan, plastic wheel rims	0,00

WHEEL FORKS

○	182006	Wheel fork (2 pc.), silver anodized	0,00
○	182007	Wheel fork (2 pc.), black anodized	0,00

REAR WHEEL ADAPTER

○	182008	Rear wheel adapter (2 pc.), silver anodized	0,00
○	182009	Rear wheel adapter (2 pc.), black anodized	0,00

HANDRAIL

Gripp

○	182026	24" wheel handrail Tetra-Gripp, black, montiert	Special coated handrail for quadriplegics	256,00
○	182027	24" wheel handrail Ergo-Gripp, black anodized, montiert	Ergonomic handrail e.g. at multiple sclerosis, paraplegia, incomplete quadriplegia	256,00

Cannot be combined with puncture-resistant PU

⊗ clear SELECTION

* Net retail prices exclusive of VAT

AS[01] order form

BACK REST

Upholstered back rest height Push handles

Height adjustable by 3 cm

Selection	Item no.	Description			EUROS *
○	183000	(35) 38 cm	Adjustable height		205,00
○	183010	(41) 44 cm	Adjustable height		205,00
○	183020	(47) 50 cm	Adjustable height		205,00
○	183060	(29) 32 cm	Rigid	No drum brake, up to SW 44	0,00
○	183030	(35) 38 cm	Rigid	No drum brake	0,00
○	183040	(41) 44 cm	Rigid	No drum brake	0,00
○	183050	(47) 50 cm	Rigid	No drum brake	0,00
○	183070	(41) 44 cm	Foldable back	No drum brake	260,00

For wheelchairs with SB 36, the back cushions can be combined in heights (29) 32, (35) 38 and (41) 44 cm
Additional back heights can be requested through a special construction

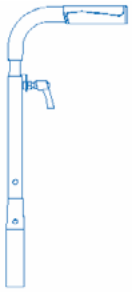

Push handles adjustable height

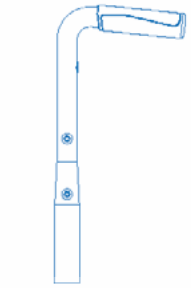

Push handles rigid

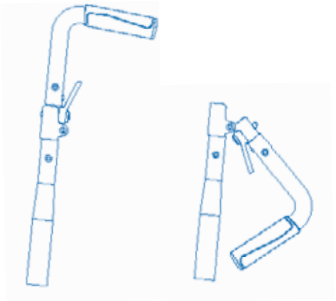

Foldable back

Angle of back rest

Adjustable in 5° increments

Selection	Item no.			EUROS *
○	181121	- 5°	Please note: limited foldability	0,00
○	181122	0°		0,00
○	181123	5°		0,00
○	181124	10°	Anti-tipping wheels (Art.-Nr. 182201 / 182202) recommended	0,00
○	181125	15°	Anti-tipping wheels (Art.-Nr. 182201 / 182202) recommended	0,00

⊗ **clear SELECTION**

*** Net retail prices exclusive of VAT**

AS[01] order form

WHEEL GUARDS

Aluminium clothes guard / wheel cover (Fig. 1)

Selection	Item no.	Description	EUROS *
○	182041	with aluminium clothes guard and wheel cover, permanent mounting, cannot be swivelled off, atomic umbra	0,00
○	182043	with aluminium clothes guard and wheel cover, permanent mounting, cannot be swivelled off, black	0,00
○	182044	with aluminium clothes guard and wheel cover, permanent mounting, cannot be swivelled off, petrol	0,00
○	182045	with aluminium clothes guard and wheel cover, permanent mounting, cannot be swivelled off, titan grey	0,00
○	182047	with aluminium clothes guard and wheel cover, permanent mounting, cannot be swivelled off, cobalt blue	0,00
○	182048	with aluminium clothes guard and wheel cover, permanent mounting, cannot be swivelled off, pearl white	0,00
○	182053	with aluminium clothes guard and wheel cover, permanent mounting, cannot be swivelled off, garnet red	0,00

Aluminium clothes guard / wheel cover / height-adjustable armrest (Fig. 2)

○	182042	Aluminium clothes guard and wheel cover, permanent mounting, cannot be swivelled off, including adjustable-height arm rests (PU), long- or desk-mounted, atomic umbra	185,00
○	182046	Aluminium clothes guard and wheel cover, permanent mounting, cannot be swivelled off, including adjustable-height arm rests (PU), long- or desk-mounted, petrol	185,00
○	182049	Aluminium clothes guard and wheel cover, permanent mounting, cannot be swivelled off, including adjustable-height arm rests (PU), long- or desk-mounted, pearl white	185,00
○	182050	Aluminium clothes guard and wheel cover, permanent mounting, cannot be swivelled off, including adjustable-height arm rests (PU), long- or desk-mounted, black	185,00
○	182051	Aluminium clothes guard and wheel cover, permanent mounting, cannot be swivelled off, including adjustable-height arm rests (PU), long- or desk-mounted, titan grey	185,00
○	182052	Aluminium clothes guard and wheel cover, permanent mounting, cannot be swivelled off, including adjustable-height arm rests (PU), long- or desk-mounted, cobalt blue	185,00
○	182054	Aluminium clothes guard and wheel cover, permanent mounting, cannot be swivelled off, including adjustable-height arm rests (PU), long- or desk-mounted, garnet red	185,00

Cannot be combined with 3° camber for drive wheels

Clothes / wheel guards of plastic including adjustable-height & swivelling off backwards (Fig. 3)

○	182061	with plastic clothes guard, can be swivelled off to the back, including adjustable-height arm rests (PU), long- or desk-mounted, matt black	175,00

Cannot be combined with 3° camber for drive wheels

⊗ **clear SELECTION**

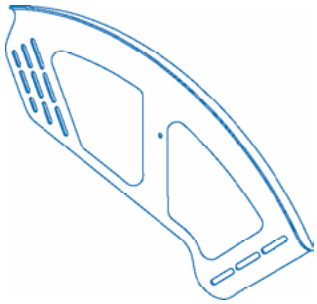

Aluminium clothes guard / wheel cover

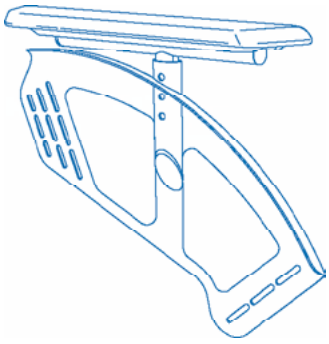

Aluminium clothes guard / wheel cover, adjustable-height arm rests (PU)

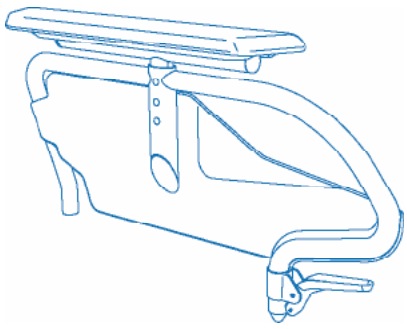

Plastic clothes guard, can be swivelled off to the back, adjustable-height arm rests (PU)

*** Net retail prices exclusive of VAT**

AS[01] order form

Selection	Item no.	Description		EUROS *
		HEMI ARMREST		
☐	182064	HEMI armrest, handpiece flat lt./rt., PU, 360° rotatable, incl. mounting mat.	46,5 cm (length)	356,00
☐	182065	HEMI armrest, handpiece ergo lt., PU, 360° rotatable, incl. mounting mat.	47,7 cm (length)	378,00
☐	182066	HEMI armrest, handpiece ergo rt., PU, 360° rotatable, incl. mounting mat.	47,7 cm (length)	378,00
☐	182063	Extension PU, forearm shell	7 cm (length)	65,00

HEMI armrest, handpiece flat

HEMI armrest, handpiece ergo

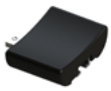

Extension

Selection	Item no.	Description		EUROS *
		LEG REST (split removable)		
		Leg Rest Hangers		
○	182101	80° leg rest	Release lever at top, swivels out to the side	0,00
○	182102	70° leg rest	Release lever at bottom, swivels out to the side	0,00
○	182103	90° leg rest, not combinalble with castor 6"/ 7"	Release lever at top, swivels out to the side	125,00
		Customized Leg Rest Hangers		
☐	182104	Customized leg rest, lower leg length 33 – 47 cm		on request
☐	182104	Customized leg rest, lower leg length 33 – 47 cm		on request
		Not possible with the leg rest hangers 70°		
		Leg Rest Foot Part		
○	182181	Leg rest foot part, black, pair	Fold-up design with heel strap	0,00
○	182191	Leg rest foot part, black, pair	Fold-up design, adjustable angle, with heel strap	48,00
○	182184	Leg rest foot part, blue, pair	Fold-up design with heel strap	0,00
○	182194	Leg rest foot part, blue, pair	Fold-up design, adjustable angle, with heel strap	48,00
○	182131	Contiguous aluminium foot plate	Fold-up design with calf strap	295,00
		Accessories		
☐	182141	BW leg rest, right	Adjustable horizontally	145,00
☐	182151	BW leg rest, left	Adjustable horizontally	145,00
☐	182161	Leg rest for amputees, adjustable angle, right		130,00
☐	182171	Leg rest for amputees, adjustable angle, left		130,00

⊗ **clear SELECTION**

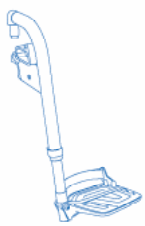

Standard leg rest

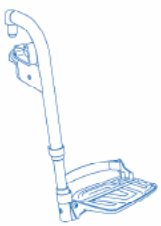

Leg rest with adjustable foot plate angle

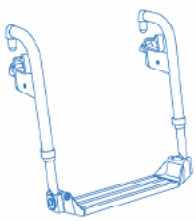

Leg rest with adjustable foot board angle

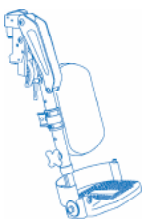

Horizontally adjustable leg rest, foot plate with adjustable angle

Leg rest for amputees, adjustable angle

*** Net retail prices exclusive of VAT**

AS[01] order form

Selection	Item no.	Description		EUROS *
SPECIAL COLORS				
		Special paint		
☐	181056	Side frame and Clothes guard aluminum	RAL colour	480,00
☐	181057	Side frame	RAL colour	320,00
☐	181058	Clothes guard aluminum	RAL colour	240,00
		The clothes guard made of plastic is not paintable		

Clothes guard aluminum

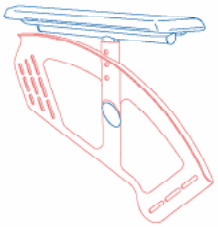

Clothes guard aluminum with height adjustable armrest

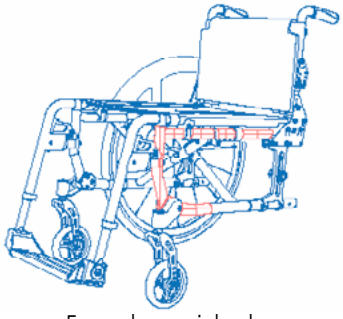

Example special colors side frames

GENERAL ACCESSORIES

☐	182202	Anti-tipping, swivel-off wheel	Right	99,00
☐	182201	Anti-tipping, swivel-off wheel	Left	99,00
☐	198069	Spoke guard with fittings transparent, drive wheel 24" not combinable with easy-running 24" wheels, and one-hand drive on the active side.	Pair	80,00
☐	182212	10 cm fold-out brake lever extension	Right	39,00
☐	182211	10 cm fold-out brake lever extension	Left	39,00
☐	182222	Walking stick holder (only in conjunction with foot tube)	Right	15,00
☐	182221	Walking stick holder (only in conjunction with foot tube)	Left	15,00
☐	182231	Activity tray, up to SB 44 cm		138,00
☐	182232	Activity tray, up to SB 46 cm		158,00
☐	182241	Foot tube	Right	35,00
☐	182242	Foot tube	Left	35,00
☐	182260	One Hand Drive not combinable with 3° camber of the castors or drum breakes. In connection with the anti-tilt wheel, assembly is only possible at a seat height of 43.75-50 cm.	Right	939,00
☐	182261	One Hand Drive not combinable with 3° camber of the castors or drum breakes In connection with the anti-tilt wheel, assembly is only possible at a seat height of 43.75-50 cm.	Left	939,00
☐	182254	One-hand brake system	Right	205,00
☐	182255	One-hand brake system	Left	205,00
☐	182262	Hemi Kit, Spacer Block: Steering wheels 30mm exposed for more foot clearance		299,00
☐	182250	Wheelchair restraint system with head rest and seatbelt		1.179,00
☐	182256	Headrest, SW 38-42, motor vehicle transport		503,40
☐	182257	Headrest, SW 44-48, motor vehicle transport		503,40
☐	182258	Headrest, SW 50-54, motor vehicle transport		503,40

⊗ clear SELECTION

*** Net retail prices exclusive of VAT**

§1 General Information
1. Our General Commercial, Delivery and Payment Terms shall apply exclusively. All incidental agreements to these Terms and Conditions, even if they are accepted by representatives or employees, shall be confirmed by us in writing in order to become valid. The General Terms and Conditions of the purchaser shall only apply if we have expressly agreed to them in writing.

2. The invalidity of any individual provisions of these Terms and Conditions shall not render these Terms and Conditions invalid as a whole.

§2 Quotations and Conclusion of Contracts
1. Our quotations shall be subject to confirmation. Orders shall only be binding on our company when we confirm them or send the goods. Incidental oral agreements shall only be valid when we confirm them in writing.

2. Confirmation of the order shall obligate the purchaser to accept the goods shown in the order confirmation.

3. The order shall normally be placed in writing (also by fax). If an order is only issued orally, transmission errors or misunderstandings shall be the responsibility of the purchaser. If a written order exists, the volume and contents of the order shall be based on this order.

§3 Delivery and Delivery Periods
1. The goods shall be delivered in the specified designs and packing units. We reserve the right to make partial deliveries.

2. We shall not be obliged to deliver goods as long as the purchaser is in arrears with his payment.

3. If an agreed delivery period is culpably exceeded, default in delivery shall only exist after granting a reasonable period of grace which shall start when we receive the notice granting this period of grace. If we fail to deliver the goods on time due to reasons for which we are responsible, the purchaser shall be entitled to demand for every full week of the delay default compensation amounting to 0.5%, but at most up to 5% of the invoice value of the goods and services affected by default. Any change in the burden of proof to our detriment shall not apply to the above-mentioned regulation. Any further claims shall be excluded, unless default is due at least to gross negligence.

§4 Force Majeure
1. In the case of force majeure, e.g. strikes, lockouts or other events which we are unable to avoid despite having taken a reasonable degree of care given the circumstances and which affects either our business or that of a supplier, the contractual obligations of the contracting parties shall be suspended for the duration and extent of the disruption.

2. If the resulting delays exceed a period of six weeks, both contracting parties shall be entitled to cancel the contract in respect of the affected goods and services. No other claims shall apply.

§5 Prices and Payment Terms
1. The prices listed (in euros) in our sales literature (catalogues, order price lists, etc.) shall be valid at the time of publication. Promotional prices shall only be valid during each specified time period. We reserve the right to change prices after the publication of sales literature. If contracts have already been concluded, there shall be no change in the agreed price.

2. The prices shall apply ex works Germany, excluding packaging.

3. Statutory VAT shall not be included in our prices. The amount of statutory VAT applying on the date of issue of the invoice shall be shown separately on the invoice.

4. Unless otherwise stipulated in the order confirmation, our invoices shall be paid without deduction within 10 days. The service period shall be shown on the invoice. The purchaser shall be in arrears without a warning.

5. If the period for payment is exceeded, we shall be entitled to charge – from the start of default – default interest amounting to at least 4% per annum. Both the purchaser and our company reserve the right to provide proof of lower or higher damage in individual case.

6. If the purchaser is in arrears and there are justified doubts concerning his ability to pay or his creditworthiness, we shall be entitled to demand securities or advance payments for outstanding deliveries, immediately assert all claims arising from the business relationship and take back goods supplied under reservation of title.

7. The purchaser shall only have the right to offset the invoice if his counter-claims are established by force of law, are undisputed or have been recognised by us.

§6 Data Storage
Information regarding § 33 of the German Federal Law on Data Protection: Customer data shall be stored.

§7 Shipping and Transport Damage
1. Products shall be shipped at the customer's risk. When a consignment is dispatched from the warehouse, risk shall be transferred to the customer. Insurance shall only be provided if specifically requested. An insurance premium amounting to 1% of the value of the goods shall then be charged.

2. If the purchaser finds that the packaging has been damaged (transport damage), he shall arrange for the damage to be certified by the transport company when the goods are accepted. Transport damage which is only ascertained after the goods have been unpacked shall be reported in writing to us within three days after receipt of the goods. This written report shall also be received by us within the same period.

§8 Warranty and Liability
1. Complaints concerning the condition of the supplied goods and any defects or damage shall only be considered if they are raised in writing with accompanying evidence within eight days of receipt of the goods, or after hidden defects are discovered, at the very latest within six months of receipt of the goods.

2. Our legal warranty shall be limited to repair or replacement of the product at our choice. If we fail to repair the product or deliver a replacement, the purchaser shall be entitled to choose between rescinding the contract or demanding a reasonable reduction in the purchase price.

3. We shall accept no liability for consequential damage.

4. The limitation period for claims and rights arising from defects shall be one year.

5. Liability limitations and exclusions shall not apply in the case of intent or gross negligence.

§9 Returns
Goods may only be returned with our approval. The reason for returning a product shall be entered on the return form. A copy of the corresponding invoice shall be enclosed with the returned product. Customised products may not be returned. In the case of goods returned against a credit note, we shall deduct a 15% handling charge. All returns shall be made at no cost to us. Items that have been altered or damaged by the purchaser may not be returned.

§10 Reservation of Title
1. The sold goods shall remain our property up until the time of full payment of the claims arising from our contractual relationship with the purchaser. The purchaser may dispose of the purchased goods in the course of normal business. The purchaser shall now assign to us as security the claims arising against third parties from the resale of goods. The purchaser shall be authorised to collect these claims on our behalf until the revocation or cessation of his payments.

2. If third parties, especially bailiffs, seize goods belonging to us, the purchaser shall make reference to our property and shall inform us immediately by means of registered letter or a fax.

3. If the purchaser violates the terms of the contract, especially if he is in arrears, we shall be entitled to take back the goods belonging to us. Exercise of the reservation of title shall not signify withdrawal from the contract.

§11 Place of Performance, Place of Jurisdiction, Applicable Law
1. The place of performance for all obligations arising from the contractual relationship shall be Karlsbad.

2. For all disputes arising from the contractual relationship, if the purchaser is a registered trader, a legal entity in public law, or a special fund under public law, legal proceedings shall be instigated at the court that has jurisdiction over our head office. We shall also be entitled to file an action at the headquarters of the purchaser.

3. German law shall apply exclusively to the contract to the exclusion of the UN Convention on the International Sale of Goods.

§12 Copyright
We reserve all rights to the ownership and copyright of images and diagrams, in particular photographs of our products, drawings, cost calculations and other documents. This provision applies above all to all written documents that are marked as "Confidential". Customers and/or business partners may use or pass on said images, diagrams and documents only subject to the prior written consent of DIETZ GmbH.

§13 Saving Clause
If one of the provisions of this contract is invalid or becomes invalid during the term of the contract, the validity and effect of the other provisions shall not be affected.

Printing errors, mistakes and changes to prices and products reserved.
© DIETZ Gmbh REHA-PRODUKTE, Karlsbad
This catalogue may be reprinted, in part or in full, only subject to the prior written consent of DIETZ GmbH, Karlsbad.
State 2020-06. V12.3.0

DIETZ GROUP

Manual wheelchairs
Electric wheelchairs
Rollators
Walking frames / Transfer platform
Walking and everyday aids
Scooters
Electric motors
Bath & WC
XXL Products
Respiratory aids
CustomLine (XXL configurator)

DIETZ GmbH

Reutäckerstraße 12
76307 Karlsbad
Telefon +49 7248.9186-0
Telefax +49 7248.9186-86
info@dietz-reha.de
www.dietz-rehab.de

DIETZ Rehab DIETZ Power DIETZ SmartCare BECHLE TOMTAR GATE